Rev.	Description	Initiator	Date
04	ECO 16921: 9121-AQ3-T: Added QTY. 1 of 9005-20-1515. Removed 3540-0101750-21 & 3700-20-4121. Resorted BOM table.	TBC	6/8/2018

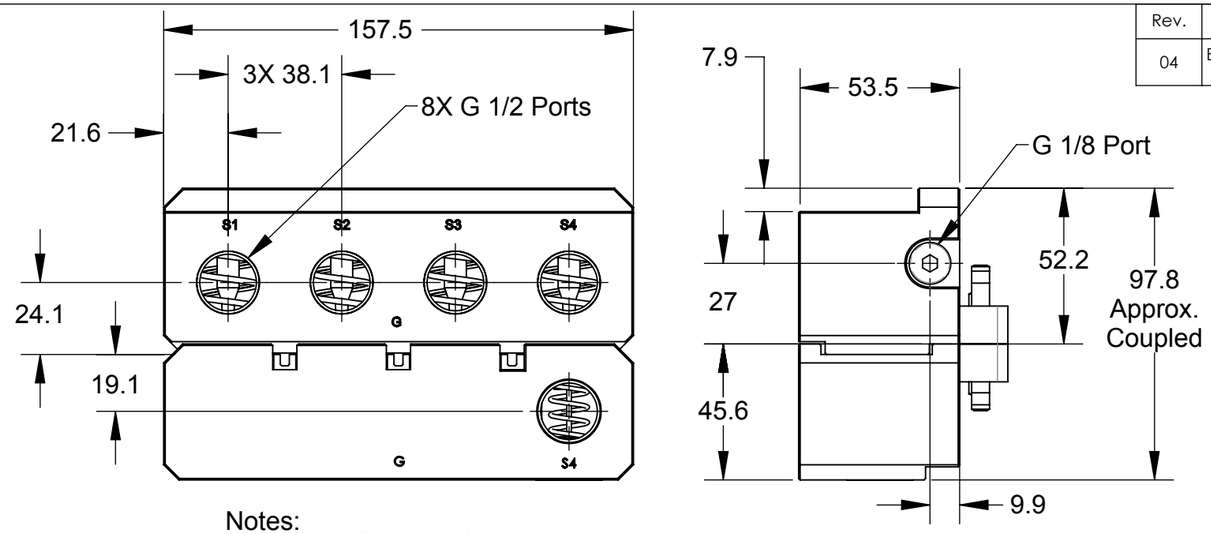

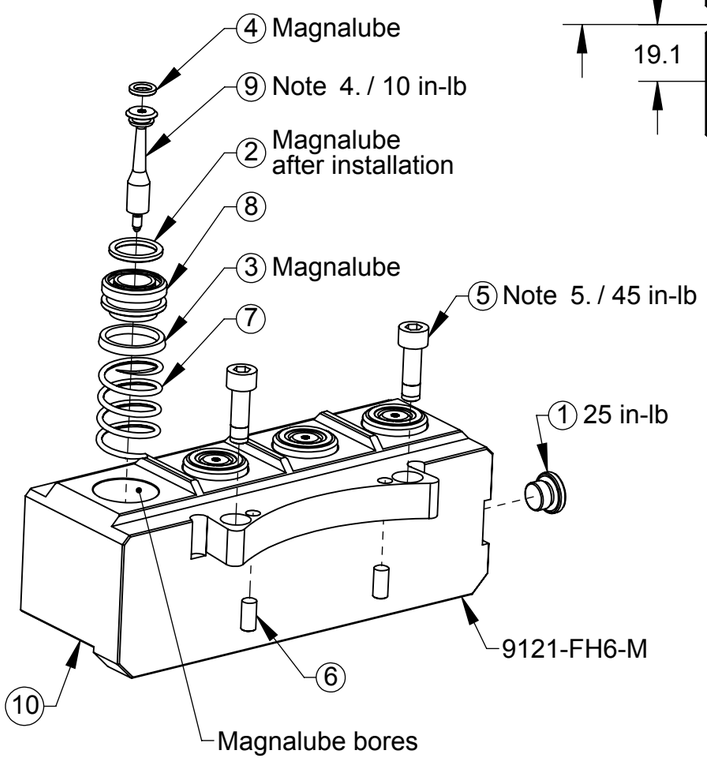

Notes:
Material of Construction:
1. Housings - Stainless Steel
2. Valve Components - Stainless Steel, PVC & Nitrile
3. G 1/8 Plug - Nickel Plated Brass
4. Replacement stem contains pre-applied thread locker. Use Loctite 7649 primer and Loctite 222 if reassembling with original stem.
5. Replacement screw contains pre-applied thread locker. Use Loctite 7649 primer and Loctite 242 if reassembling with original screw.

Operations:
6. For best results ensure fluids are near neutral pH, minimize fluid particulate size and keep fluid module mating surfaces free and clear of any debris.
7. Checked ports can produce significant forces when under high supply pressures. See product manual regarding proper operating procedure.

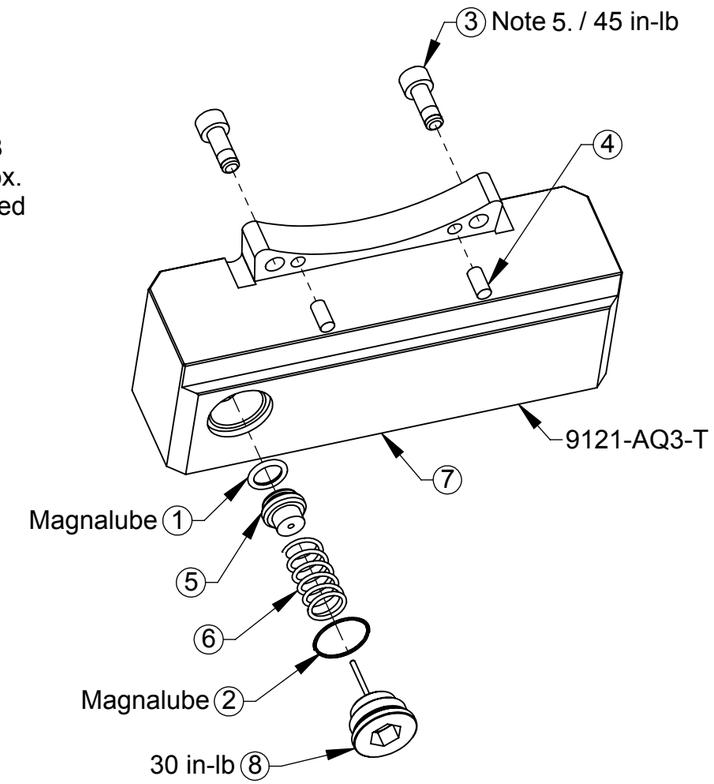

ITEM NO.	QTY	PART NUMBER	DESCRIPTION
1	1	3405-1000002-00	G1/8 Plug, Hex Socket, O-Ring Seal
2	4	3410-0001065-01	O-Ring 14MM X 2MM Buna
3	4	3410-0001068-01	Mini U-Cup Seal 18mm ID x 22mm Buna
4	4	3410-0001183-01	O-Ring 6MM X 2MM Buna D90
5	2	3500-1066020-21A	M6-1 x 20mm SHCS, SS, Pre-Applied
6	2	3540-0105010-21	5mm x 10mm Dowel Pin SST
7	4	3700-20-1459	SW-150A Master Fluid / Air Spring SS
8	4	3700-20-2994	Master Check Valve Piston, FA44
9	4	3700-20-2996	VALVE STEM, HIGH STRENGTH
10	1	3700-20-6195	(4) G 1/2 Fluid/Air Master Housing SS w 3/8" Poppets

Note: Service Kit 9120-F2-M-Kit consists of (1) each of items 2, 3, 4, & 7.

ITEM NO.	QTY	PART NUMBER	DESCRIPTION
1	1	3410-0001067-01	O-ring, 10mm x 2mm, Buna N, Dur. 90
2	1	3410-0001284-01	O-ring, .669OD x .047 wall, 70D, Buna-N
3	2	3500-1066016-21A	M6-1 x 16mm SHCS, SS, Pre-Applied
4	2	3540-0105010-21	5mm x 10mm Dowel Pin SST
5	1	3700-20-1457	SW-150A Tool Check Valve Piston
6	1	3700-20-1460	SPRING, F/A TOOL
7	1	3700-20-6925	(1) G 1/2 Air Tool Housing w 3/8" Poppet at Port S4
8	1	9005-20-1515	3/8" Check Port Long Plug with Dowel

Note: Service Kit 9120-F1-T-Kit consists of (1) each of items 1, 2, & 6.

NOTES: UNLESS OTHERWISE SPECIFIED.

DO NOT SCALE DRAWING. ALL DIMENSIONS ARE IN MILLIMETERS.

3rd ANGLE PROJECTION

ATI INDUSTRIAL AUTOMATION

1031 Goodworth Drive, Apex, NC 27539, USA
Tel: +1.919.772.0115 Email: info@ati-ia.com
Fax: +1.919.772.8259 www.ati-ia.com
ISO 9001 Registered Company

PROPERTY OF ATI INDUSTRIAL AUTOMATION, INC. NOT TO BE REPRODUCED IN ANY MANNER EXCEPT ON ORDER OR WITH PRIOR WRITTEN AUTHORIZATION OF ATI.

DRAWN BY: D. Wagner 11/10/09
CHECKED BY: DKL 5/3/11
PROJECT # 091016-2 SHEET 1 OF 1

TITLE
FH6-M, AQ3-T Module Drawing

SCALE	SIZE	DRAWING NUMBER	REVISION
1:2	B	9630-20-FH6M-AQ3T	04